Tandem Axle 40'
https://www.timpte.com
Timpte_TandemAxle_40.pdf 1

TIMPTE
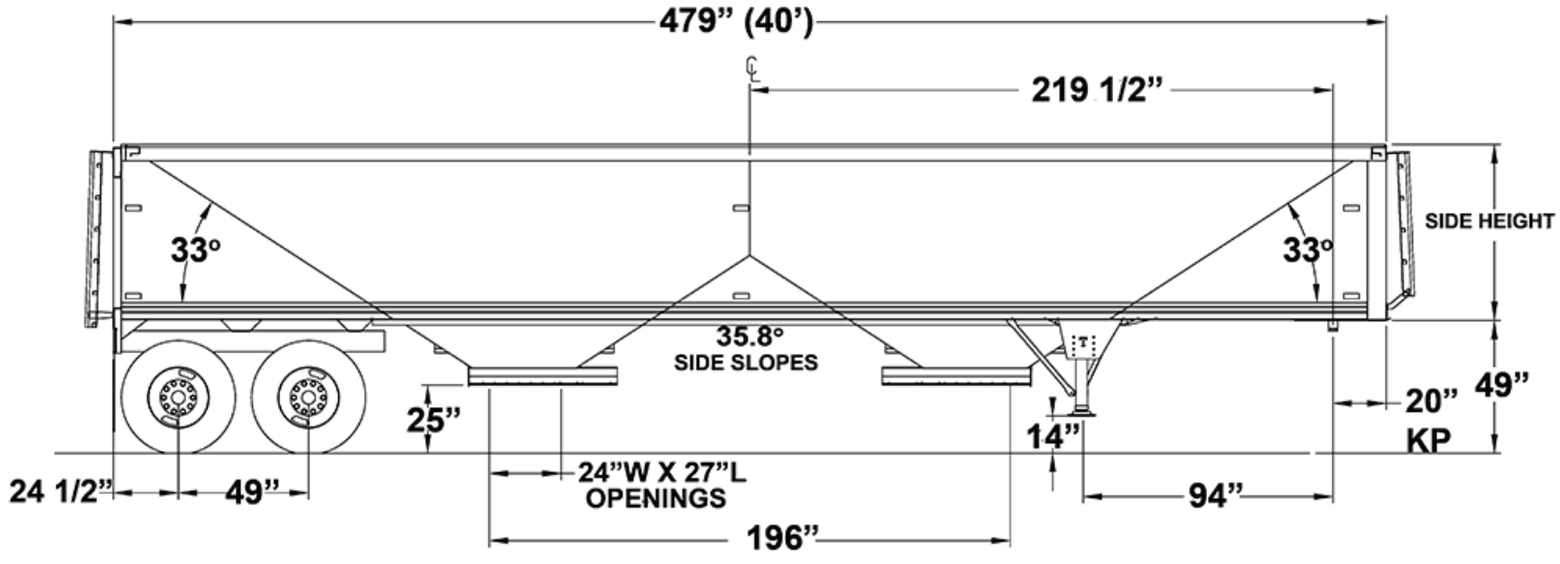
TANDEM AXLE 40'